NATIONAL ECOLOGICAL OBSERVATORY NETWORK

http://www.neoninc.org

Chuck Bohall, Aquatic Instrument Scientist

NEON Overview

- World's first ecological observatory
- Solely funded by the NSF
- Funded under MREFC
- Collaborative scientific enterprise
  - Free and open access NEON data and data products
  - Access to NEON infrastructure – research support
- Timeframe
  - A decade of community input and design
  - Beginning of a 5-year construction period
  - 30 year period of observations
- Experiment infrastructure backbone for experiments:

  e.g. STREON experiment

This Presentation

- Overview of NEON and NEON's Ecological Observations
- Locations and Platforms for observations
- NEON Aquatics
- Aquatic Challenges
- Aquatic Sites
  - Aquatic Observations
  - Aquatic Instrument Systems
    - Sensor selection
    - Sensor deployment
- STREON

Observing Ecological Change

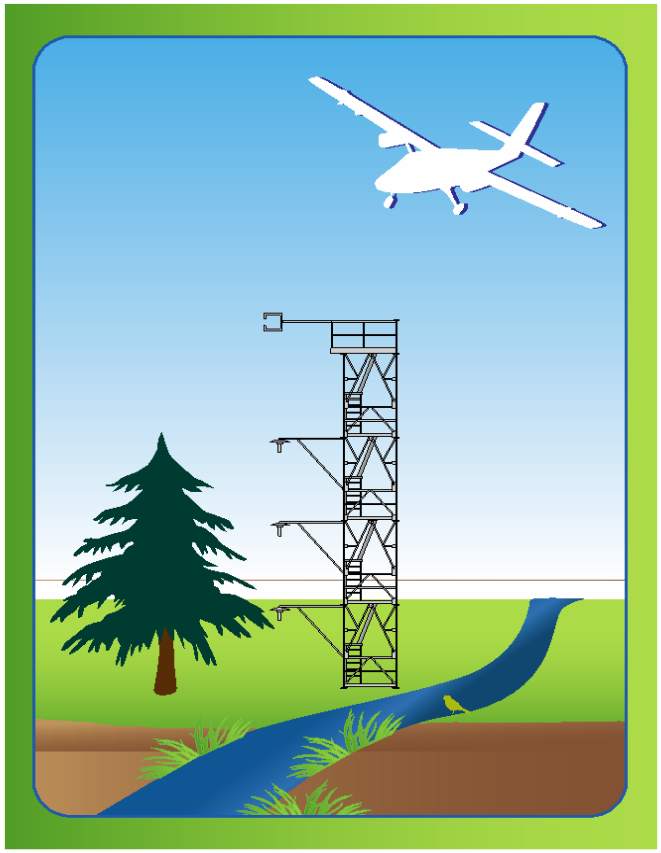

- Representative sampling
- Standardized methods across domains
- Continental in scope – distributed over 20 domains
- Detecting/attributing change over decades
- Standardized and transparent protocols
- Comprehensive set of observations
- Field and lab analyses state-of-the-art
- QA/QC -- data quality and uncertainty

NEON-enabled Ecology

- NEON-Enabled
  - Monitor the causes of and responses to change at ~106 sites in the US using standardized methods
  - Scaling -- combine with aerial & satellite data to ‘scale up’
  - Document & evaluate changes at the continental scale.

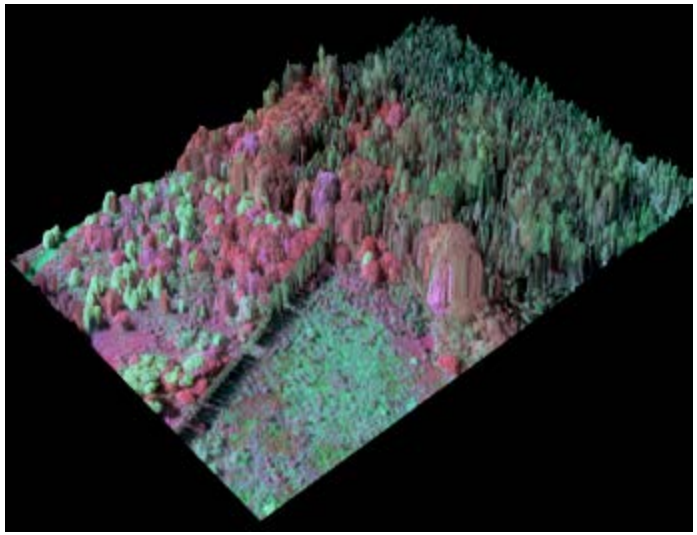

Solely Funded by the National Science Foundation

to *enable understanding* and *forecasting* of the *impacts* of *climate change, land use change* and *invasive species* on *continental-scale ecology*

by providing infrastructure to support research, education and environmental management in these areas

Grand Challenges

Causes of Change

Climate
Land Use
Invasive Species

Response to Change

Biodiversity
Biogeochemistry
Ecohydrology
Infectious Disease

NEON Framework

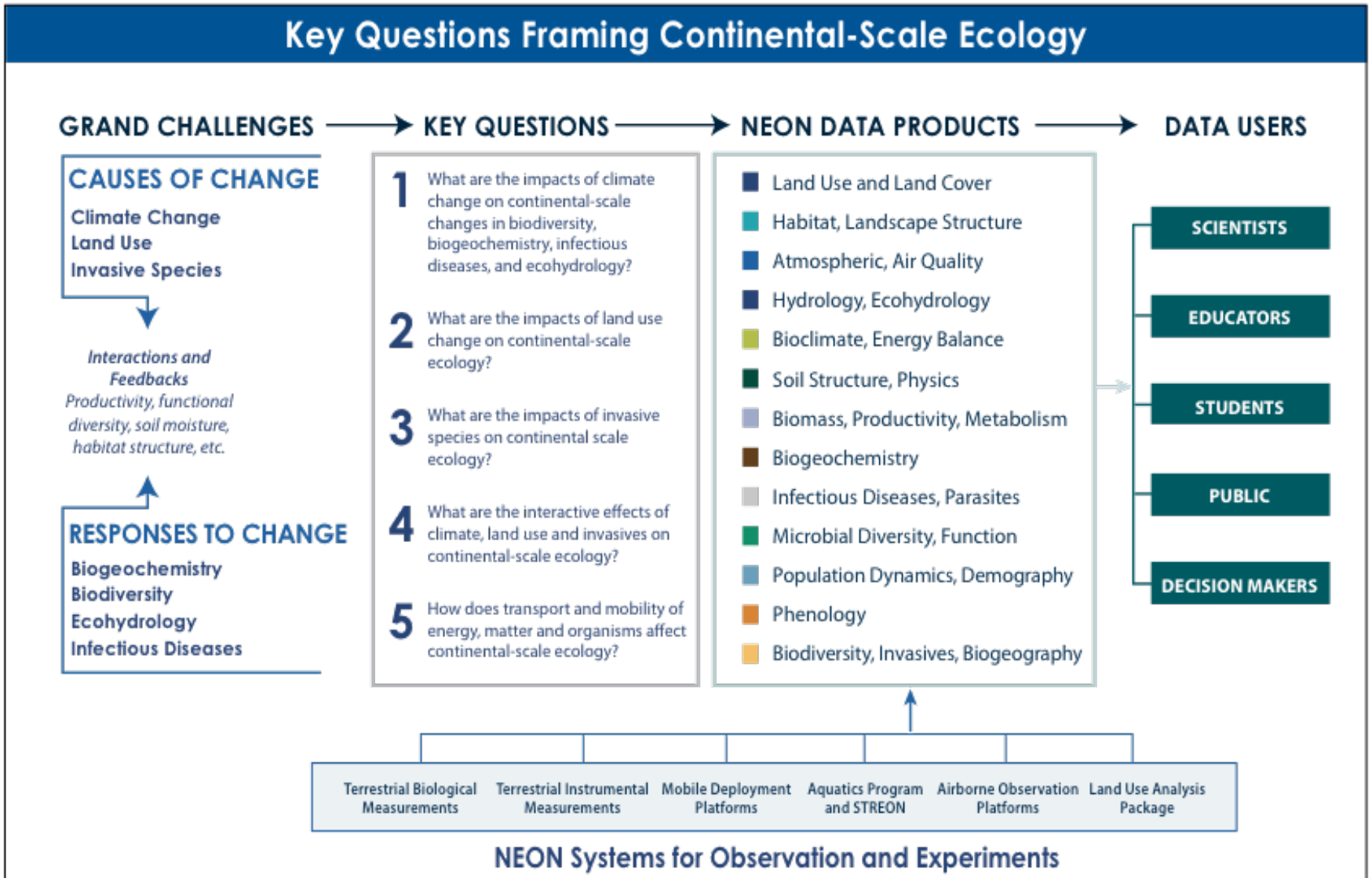

How NEON Works

NEON Data Access Policy

NEON WILL PROVIDE <u>FREE AND OPEN</u> ACCESS TO:

- All data*
- All metadata*
- All QA/QC information (process and data)
- Protocols and procedures used to collect data
- Instrument specifications, characteristics and performance
- Algorithms used to process data
- For PI users of NEON assignable facilities
    - Must comply with the above
    - *Proprietary period up to 18 months to validate and prepare data*

**Unless legally protected by the Endangered Species Act or other legislation*

Where will NEON observe?

Mapping the questions onto specific sites

Urban Ecosystems

Invasive Biology

Forest Management

Climate Change & Atmospheric Transport

Ecohydrology Systems

Agricultural Systems

NEON Observation Platforms

Aquatic Instruments & Observations

Airborne Observations

Terrestrial Instruments

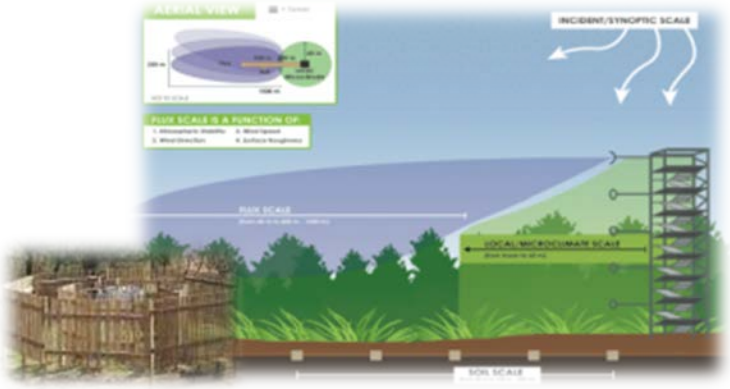

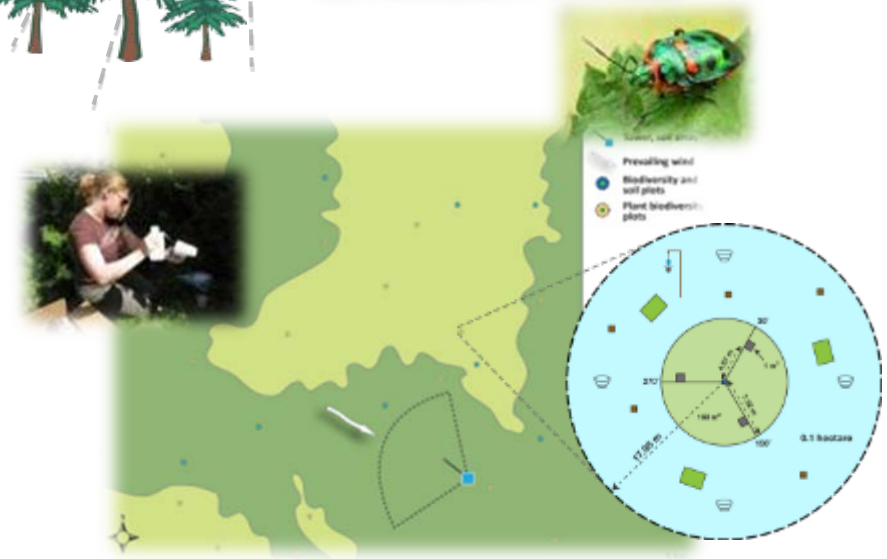

Terrestrial Observations

Operation concerns at NEON sites

Minimize site impacts

Measure ecosystem changes due to climate, land-use, and invasive species

NEON does not want to create change due to maintenance, site visits, sample collection

Minimize site access (30 years)

Blacktail Deer Creek, WY

Minimizing operation impacts

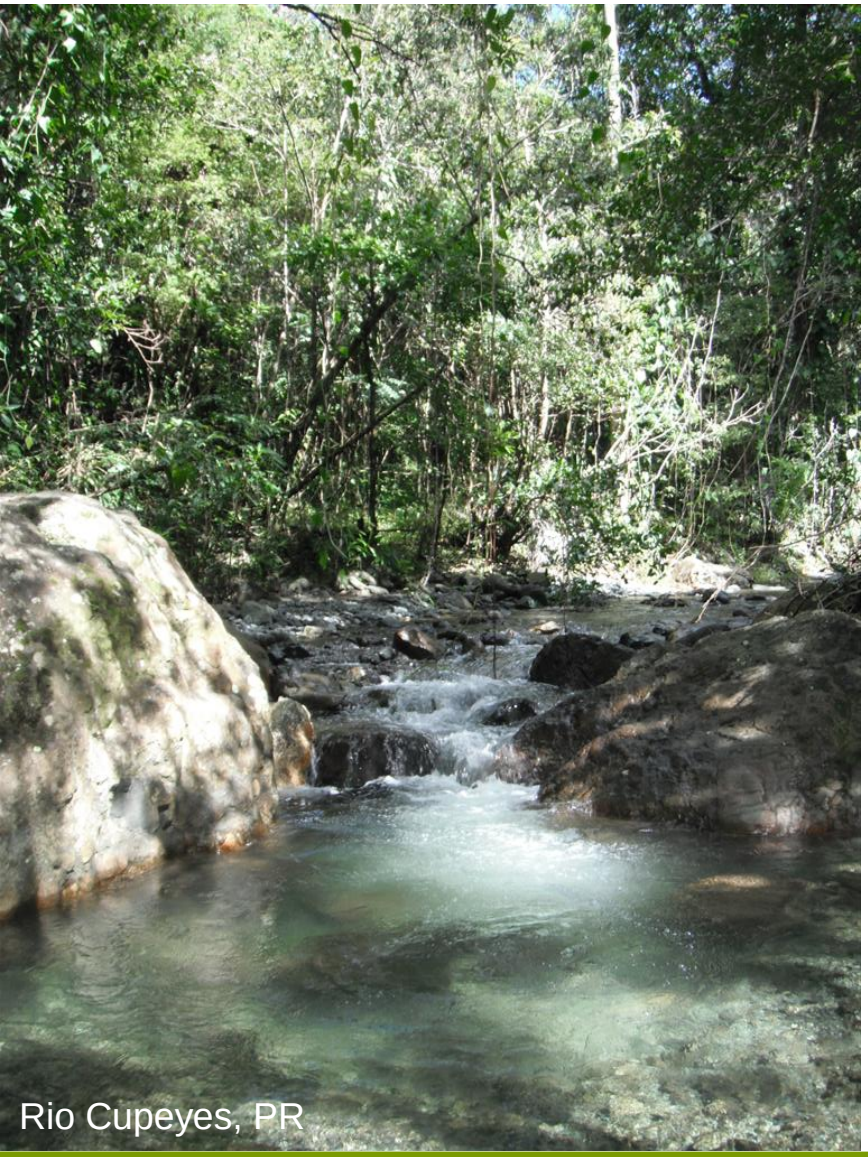
Rio Cupeyes, PR

Limit contact with stream/lake edge

Entering the wetted channel only when necessary

Heavy equipment, vehicles >10 ft from bank

Use access paths and boardwalks

Leave the site as you found it

Site-specific considerations

Information on site-specific conditions will be passed on to Field Operations

Safety

- Flash floods
- Unstable banks
- Wildlife (snakes, alligators)

Site preservation

- Endangered species
- Invasive species
- Erosion

Boulder Creek trib, CO

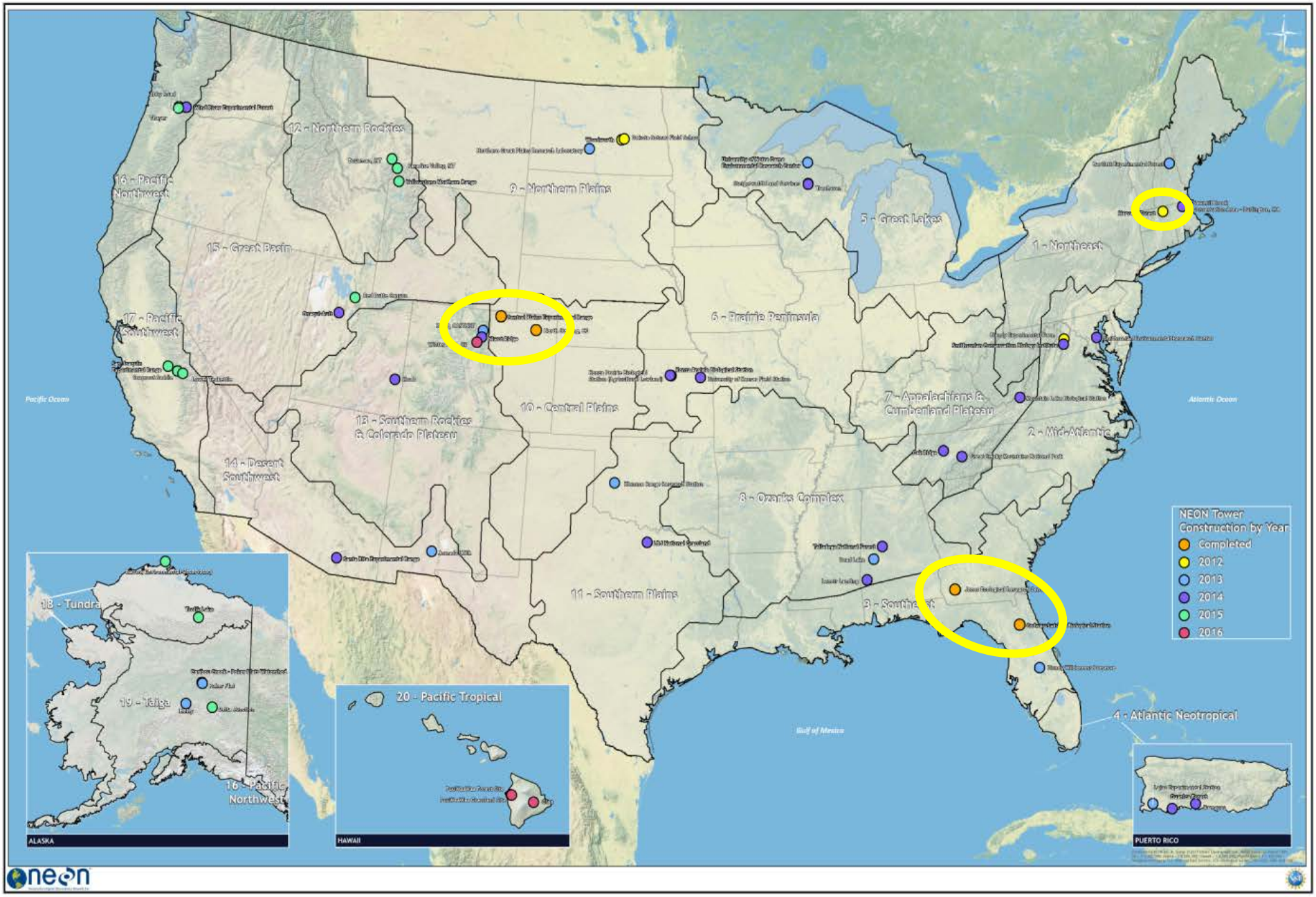

NEON Construction Status

Science Team Leads www.neoninc.org

- Airborne Observation Platform — Tom Kampe
- Aquatic Sciences — Charlotte Roehm
- Data Products — Steve Berukoff
- Terrestrial Instrument — Jeff Taylor
- Scientific Research Collections — Mike Denslow
- Terrestrial observations — Andrea Thorpe

NEON AQUATIC PROGRAM AND STREON EXPERIMENT

Photo: M. Fitzgerald, NEON

NEON Science Subsystems

Aquatic/STREON	Instr. + field sampling
Terrestrial Instrumentation	Tower - Automated Instrumentation
Terrestrial Observations	Terrestrial biology – field sampling
Airborne Observations	Aircraft Remote Sensing
Land Use Analysis Package	Satellite Remote Sensing
Education mission	Prepare society/scientific community to use NEON data, information, forecasts

26 streams, 7 lakes, 3 non-wadeable streams

Wadeable streams

Range of geomorphologic and hydrologic regimes and land-use types

Mayfield Creek, AL

Caribou Creek, AK

Lakes and Non-wadeable streams

Range of lake size and depth

Large rivers in southeast for ecohydrologic gradient

Tombigbee River, AL

Lake Crampton, WI

Core aquatic data targets

Biogeochemistry

Biodiversity

Climate change

Ecohydrology

Infectious disease

Invasive species

Land use change

Sycamore Creek, AZ

Challenges

Standardized sensor sets and sampling methods to use at all sites

Standardized temporal sampling strategy to use at all sites

Continuous monitoring (sensors), consistent terminology

Quantifying uncertainty, data quality standards, metadata standards

Consistent QA/QC, verification, NIST traceable calibrations

Blacktail Deer Creek, WY

Challenges

20 Eco-climatic domains

No aquatic sites in domain 20, Pacific Tropical

- Dry sites and 0 flow
- Ice in winter
- Shallow systems
- Flashy hydrology
- Deep non-wadeable rivers
- Clear to very turbid
- Biofouling

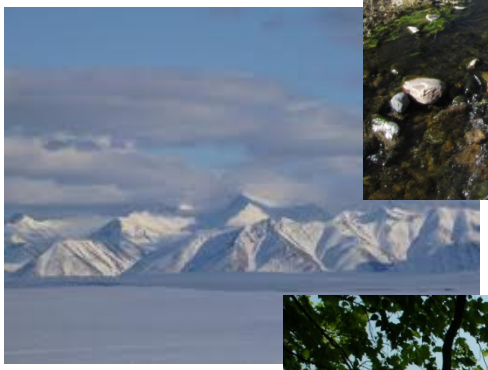

Site Layout Overview - Streams

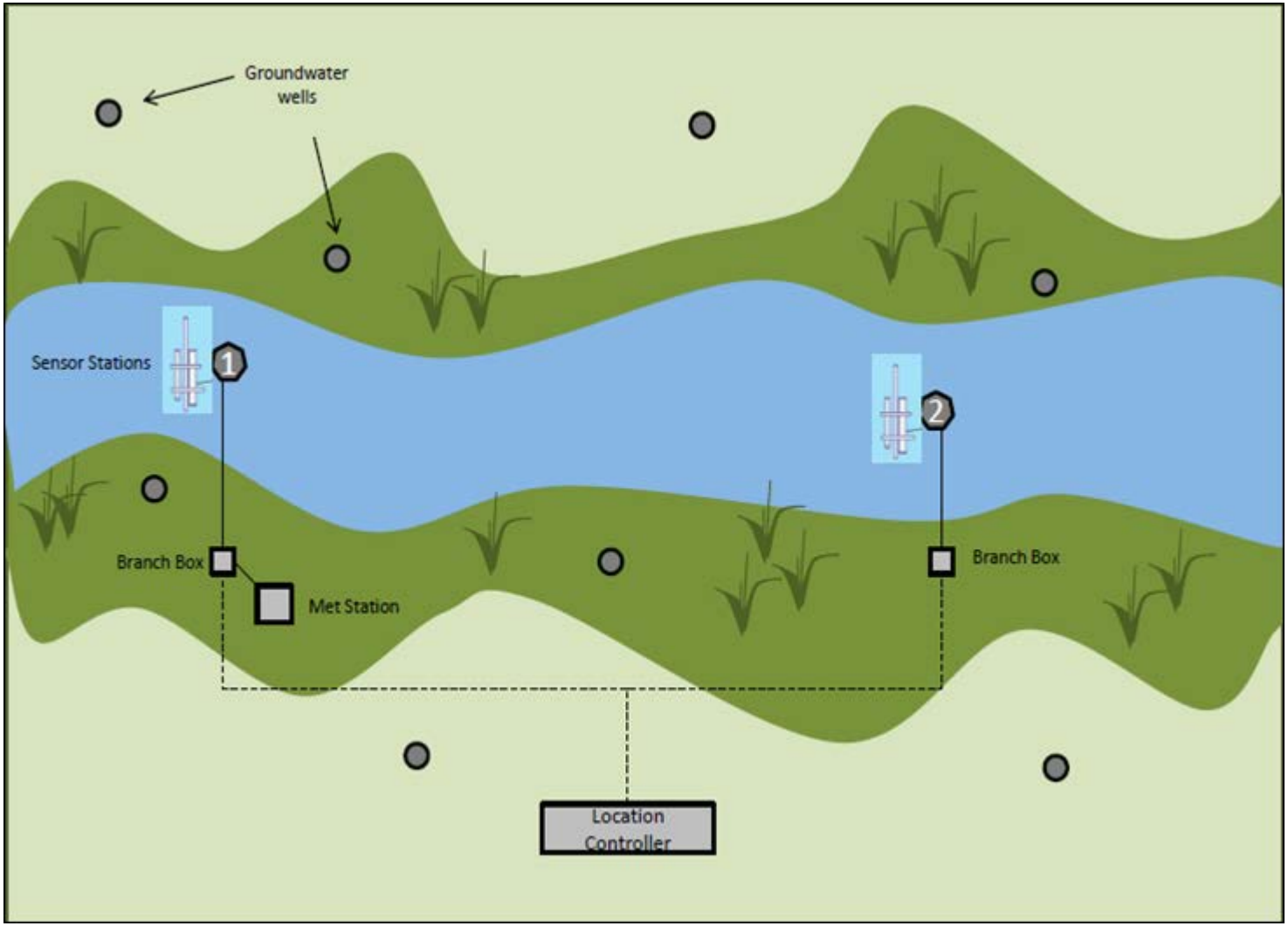

Site Layout Overview - Lake

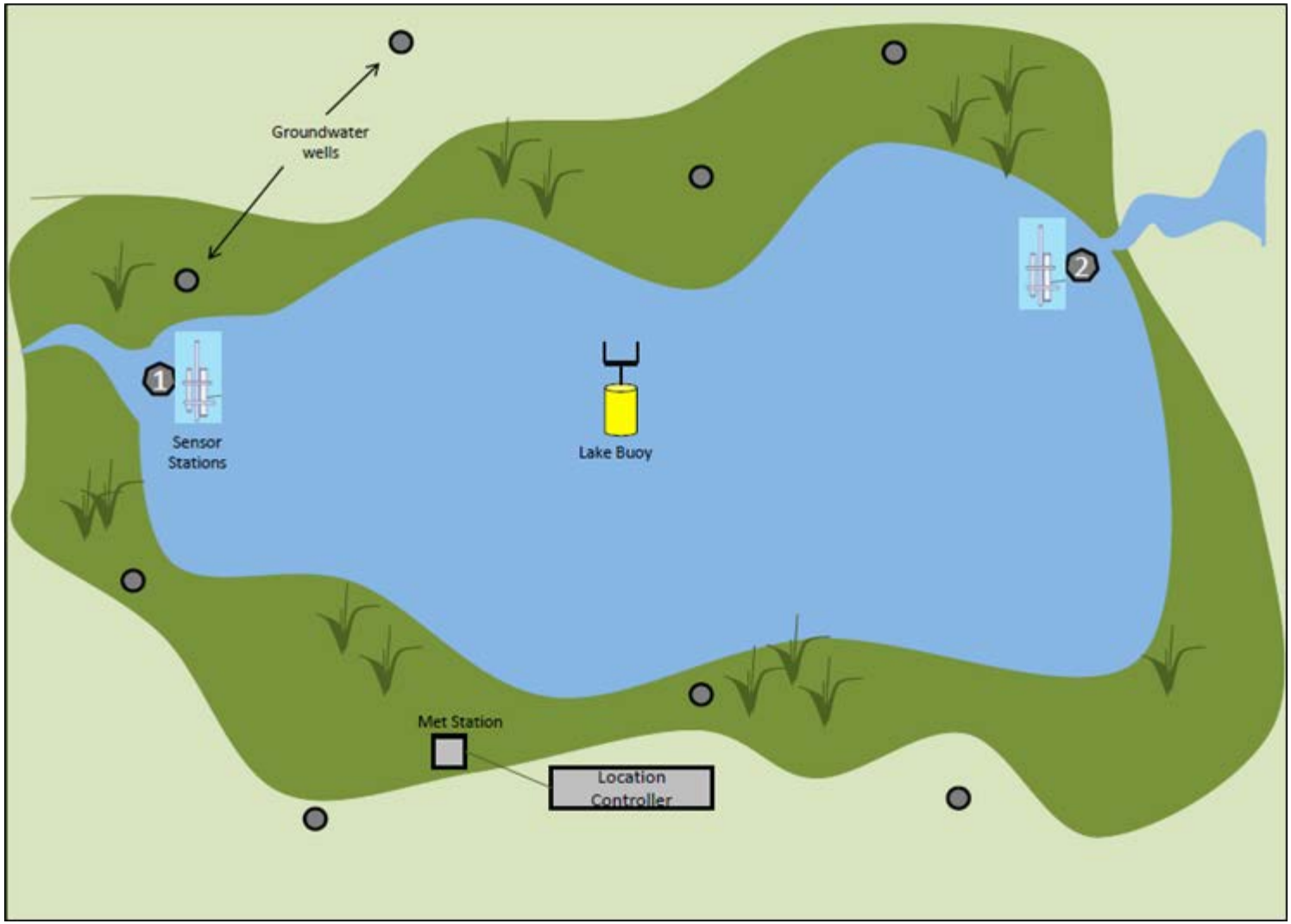

Aquatic Measurements

Aquatic Instrument Systems AIS

- In-stream/In-lake
  - Stream discharge, (lake) level
  - Multisonde (2): water temp, dissolved oxygen, turbidity, pH, conductivity, chlorophyll A
  - Dissolved Organic Matter
  - Nutrients
  - PAR and underwater PAR
- Near-Stream Meteorology Station
  - Air temperature, Precipitation, Barometric Pressure, PAR, Net Radiation
  - Wind speed and direction
  - Camera
- Groundwater
  - Temperature, Level, Conductivity

Aquatic Observations Systems AOS

- Hydrology
- Chemistry / Isotopes
  - Surface water
  - Groundwater
  - Sediment
  - Algae/biofilm
- Biological diversity
  - Microbes
  - Algae
  - Aquatic Plants
  - Invertebrates
  - Fish
- Morphology, Bathymetry
- Riparian canopy

Aquatic Observation System (AOS)

- Algae
- Aquatic macrophytes, bryophytes and lichens
- Aquatic microbes
- Zooplankton
- Aquatic invertebrates
- Fish
- Aquatic habitat
- Sediment chemistry
- Water chemistry

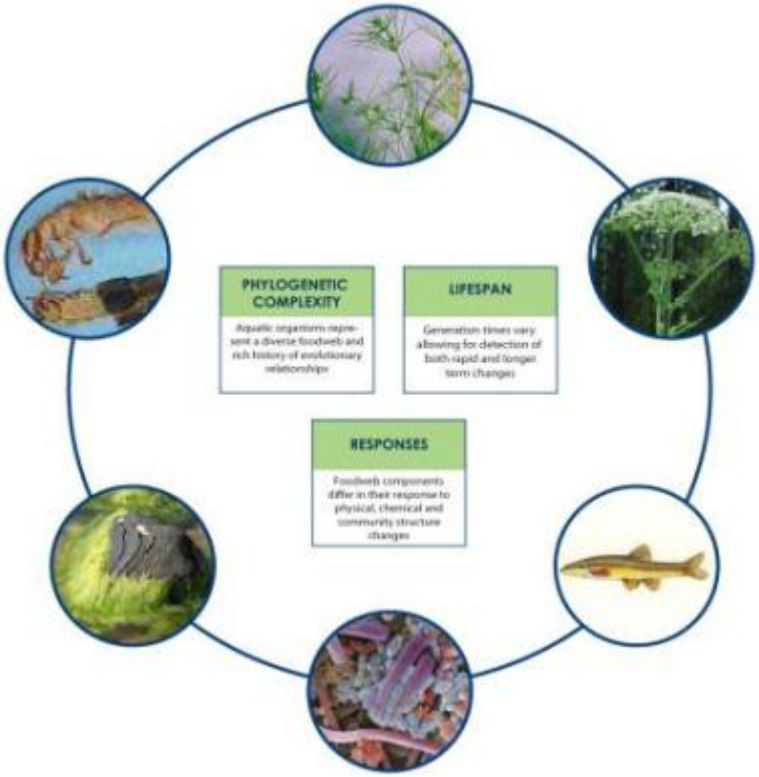

Hydrology and morphology

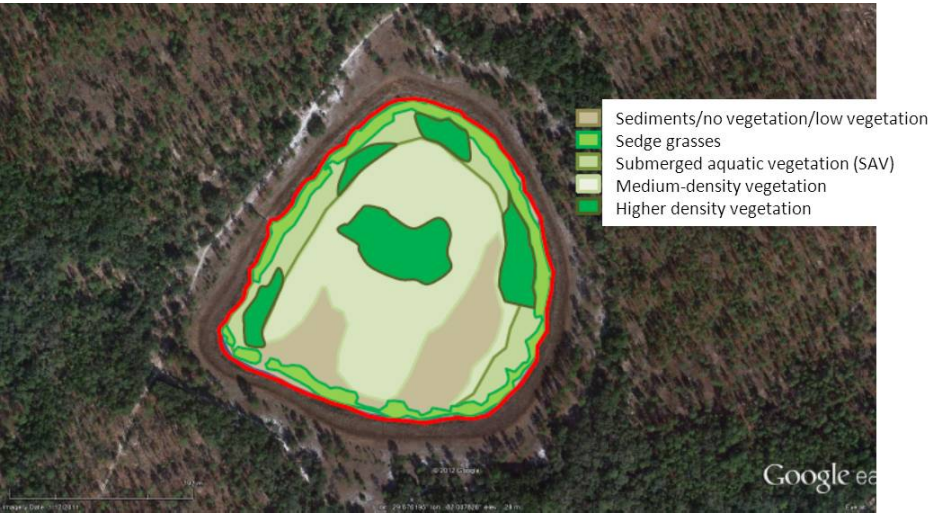

Discharge measurements at various flows

Develop discharge rating curve

Annual morphology survey (streams)

Annual bathymetry survey (lakes, non-wadeable streams)

Boulder Creek, CO

Chemistry

Surface water (≤ 26x per year)

- Alkalinity
- Ions (Ca, Mg, Mn, Na, etc.)
- Chloride
- Total suspended solids (C, N, P, etc.)
- Nutrients (NO_3, NH_4, SRP, DOC, etc.)
- Dissolved gas (CO_2, N_2O, CH_4, etc.)

Groundwater (≤ 2x per year)

- Same as above
- No dissolved gasses or TSS

Sediment (≤ 5x per year)

- Full sediment suite
- Metals
- PCB, PAH (pollutants)

Isotopes (water, sediment, organics)

- ^{18}O, ^{13}C, ^{15}N, ^{34}S

Organismal sampling

Wadeable Streams		Lakes, Non-wadeable Streams
Microbes	3-12x per year	Microbes
Periphyton, seston Aquatic plants, bryophytes, lichens, macroalgae Macroinvertebrates	3x per year	Periphyton, phytoplankton Aquatic plants, bryophytes, macroalgae Macroinvertebrates, zooplankton
Fish	≤2x per year	Fish

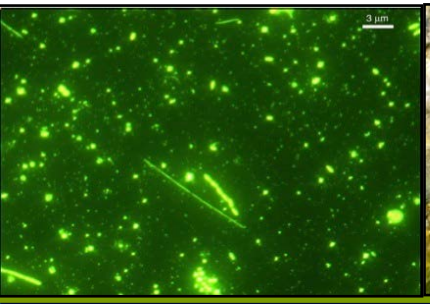

Protocol testing

Protocols tested by NEON staff volunteers

Ensure clarity of protocol

Sample strategy, example factors

Hydrology –

Chemistry – range of flow + storm flows

Biology – safe wading, “baseflow” conditions

Temperature (degree days) – ice-off, organism development

Riparian phenology (greenness) – channel shade, leaf litter inputs

- Field Observations
  - Sampling designs and strategies
  - Standardized field protocols
  - Training materials
  - Field data acquisition (PDA)
  - Data product algorithms (ATBDs)
  - Analytical lab contracts
  - QA/QC
- Sensors
  - COTS sensors (testing)
  - Installation designs
  - Maintenance SOPs
  - QA/QC
  - Command and Control
  - ATBDs

Aquatic Instrument System (AIS)

- **Aquatic In stream sensors**
  - Water temp, DO, turbidity, pH, conductivity
  - Chromophoric dissolved organic matter
  - Chlorophyll
  - Discharge/water level
  - Nutrient Analyzer
  - Photosynthetically active radiation (PAR)

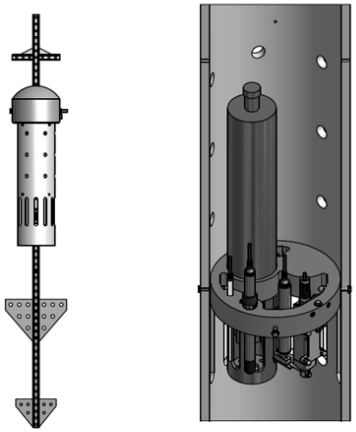

INTERNAL COMPONENTS
SCALE 1:4

- **Stream-side – meteorology**
  - Air temp, precipitation, barometric pressure, PAR, net radiation
  - Wind speed and direction
  - Camera
- **Groundwater sensors**
  - Temperature, level and conductivity

Sensors and Infrastructure Designs

- COTS Sensors and Instruments
- Sensor measurement defined
- Sensor manufacturers being selected
  - Awaiting NSF approval
- Sensor installation designs ongoing
- Make designs available to the public

- Accepting applications for an instrumentation working group
  - General discussions
  - Workshops

Sensor Testing

- Testing sensors
  - Field
  - Laboratory

Aquatic Sensor Infrastructure Designs

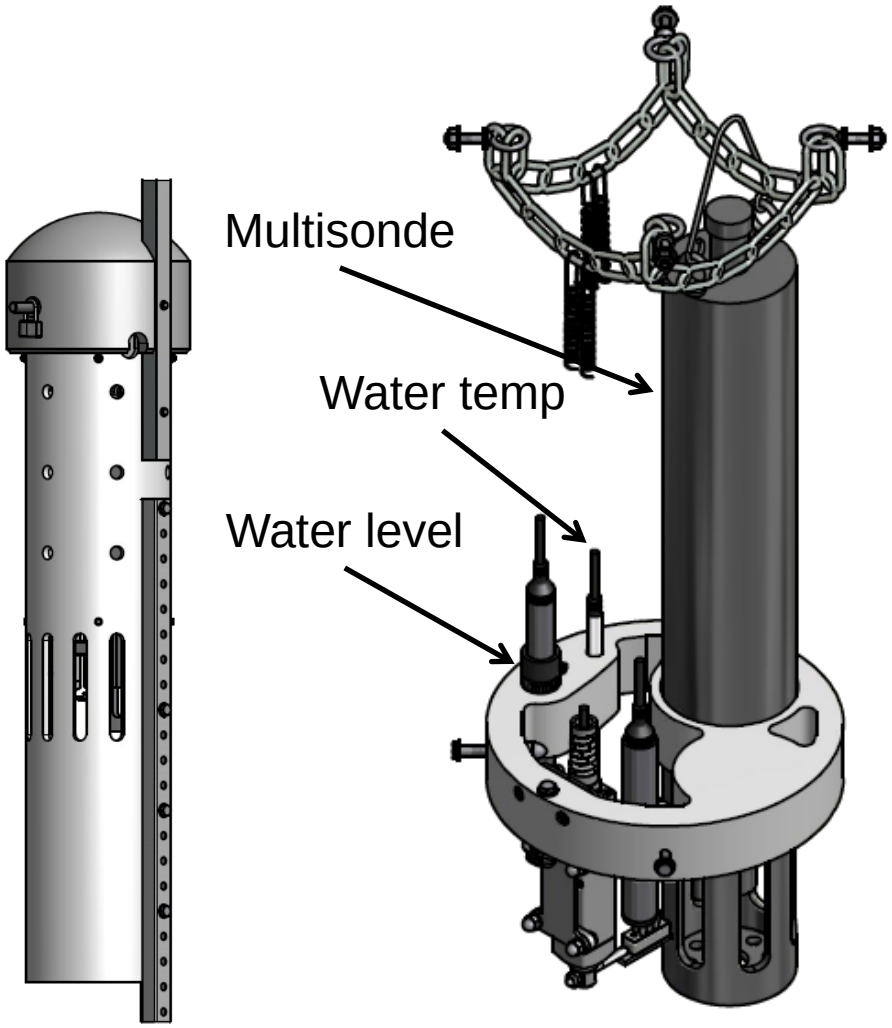

Aquatic Sensor Infrastructure Designs

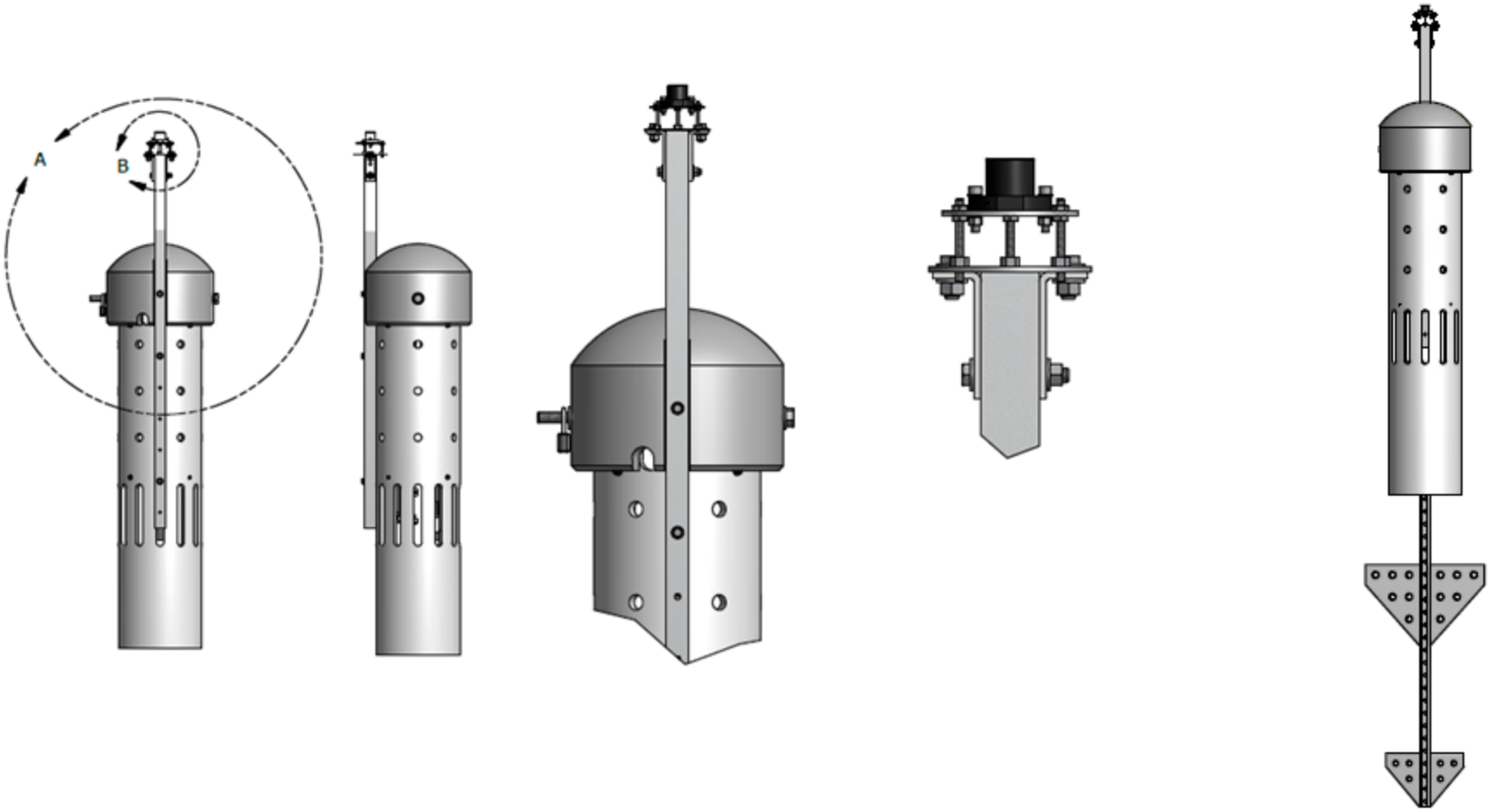

Aquatic Sensor Infrastructure Designs

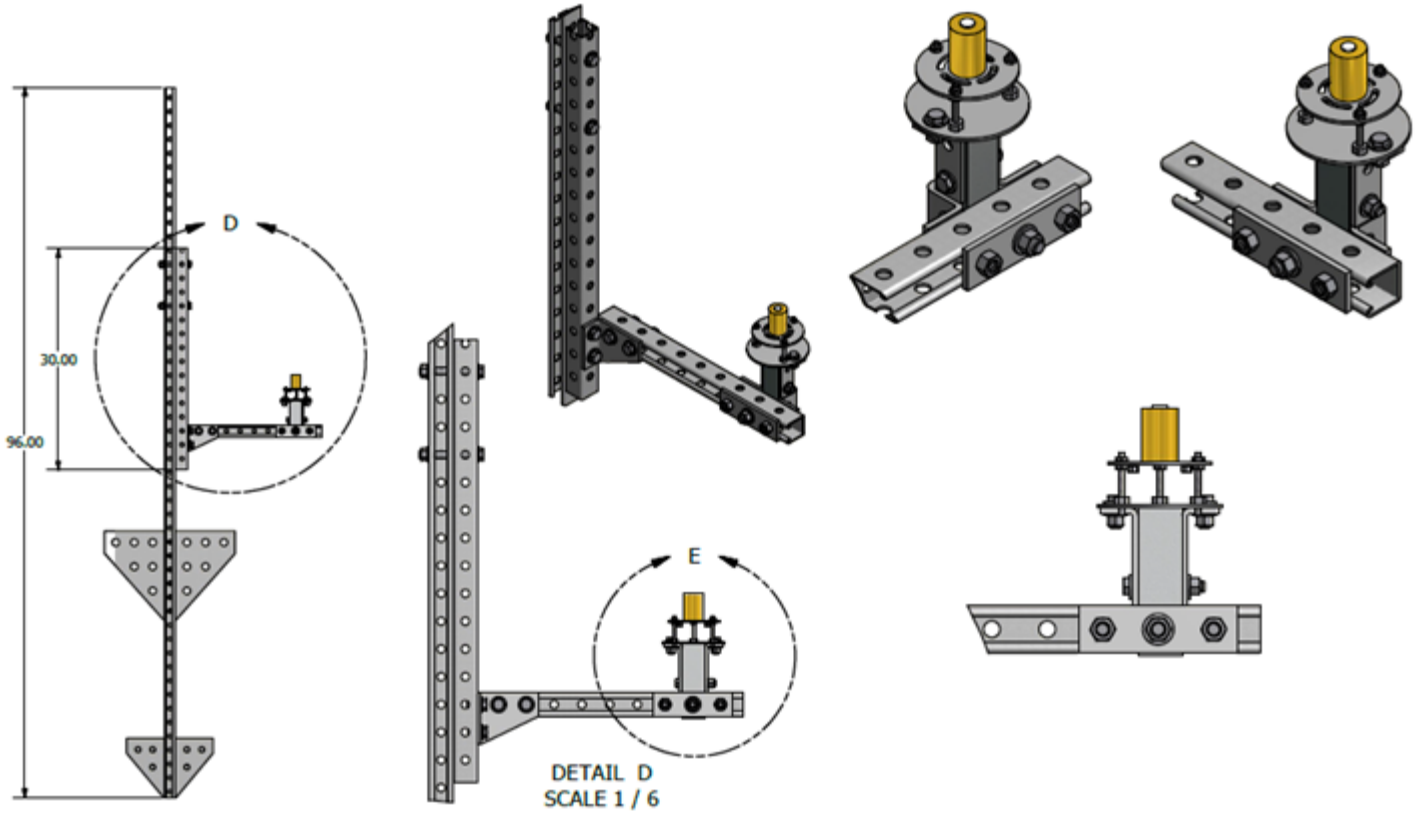

Aquatic Sensor Infrastructure Designs

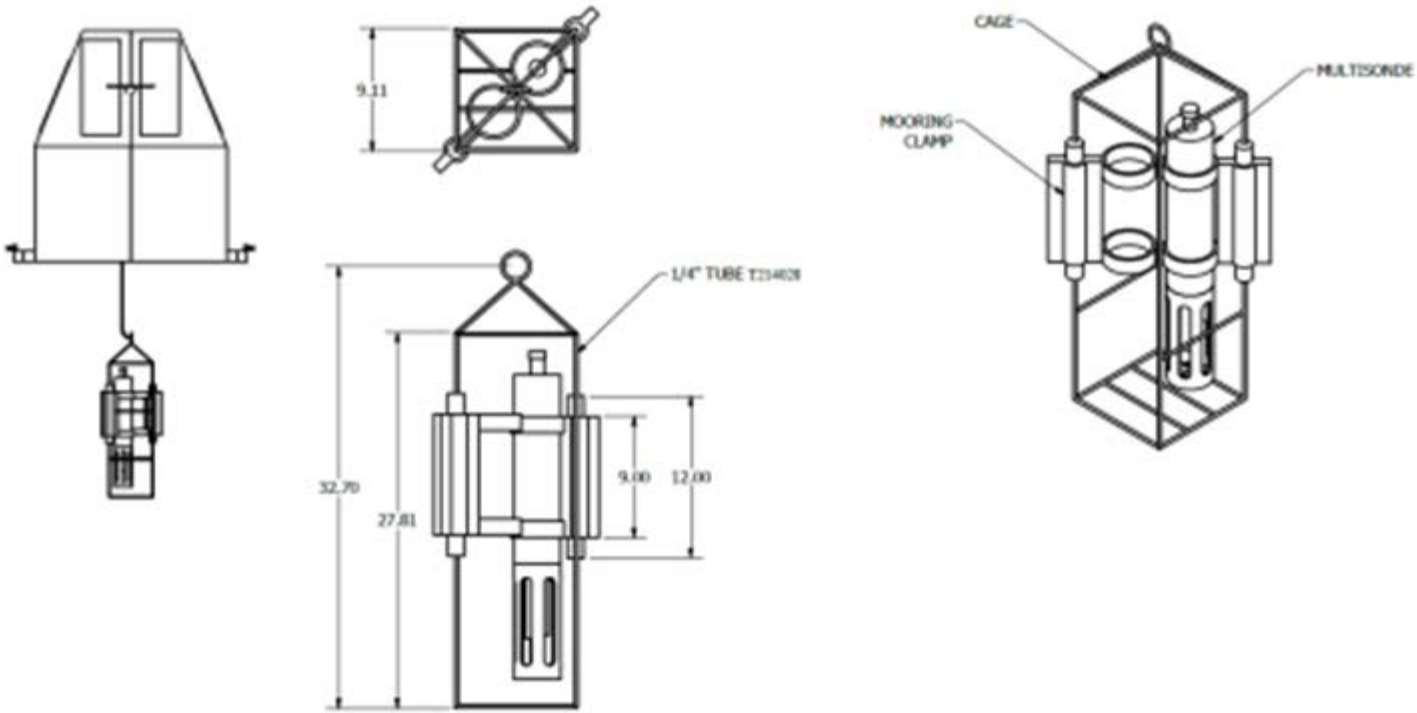

QA/QC

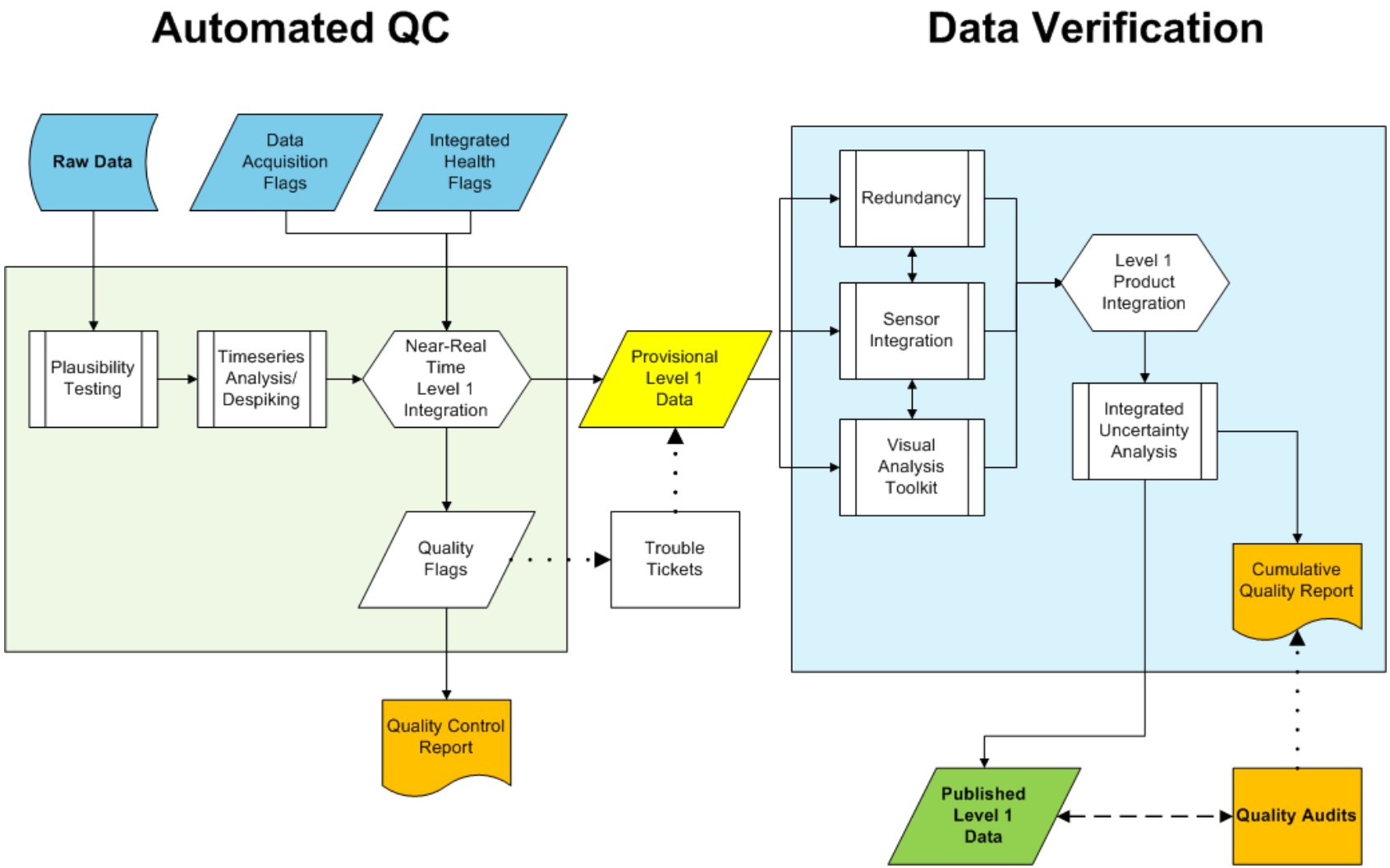
Automated QC
Data Verification
Raw Data
Data Acquisition Flags
Integrated Health Flags
Plausibility Testing
Timeseries Analysis/ Despiking
Near-Real Time Level 1 Integration
Quality Flags
Quality Control Report
Provisional Level 1 Data
Trouble Tickets
Redundancy
Sensor Integration
Visual Analysis Toolkit
Level 1 Product Integration
Integrated Uncertainty Analysis
Cumulative Quality Report
Published Level 1 Data
Quality Audits

Challenges in Continuous Monitoring and Opportunities for the Community

- Community-Wide Challenges and Future Directions:
  - Consistent Terminology, Shared Vocabularies
  - Consistent Data Base Structures
  - Data Quality Standards, Terminology, and Metrics (Uncertainty)
  - Metadata Standards
  - Gap-filling Metrics
- Community Integration
  - Collaboration
  - Working Groups
  - Workshops
- Forecasting
- Macrosystems proposals and other grants
  - Add- onto infrastructure
  - Use NEON data

STReam Experimental Observatory Network (STREON)

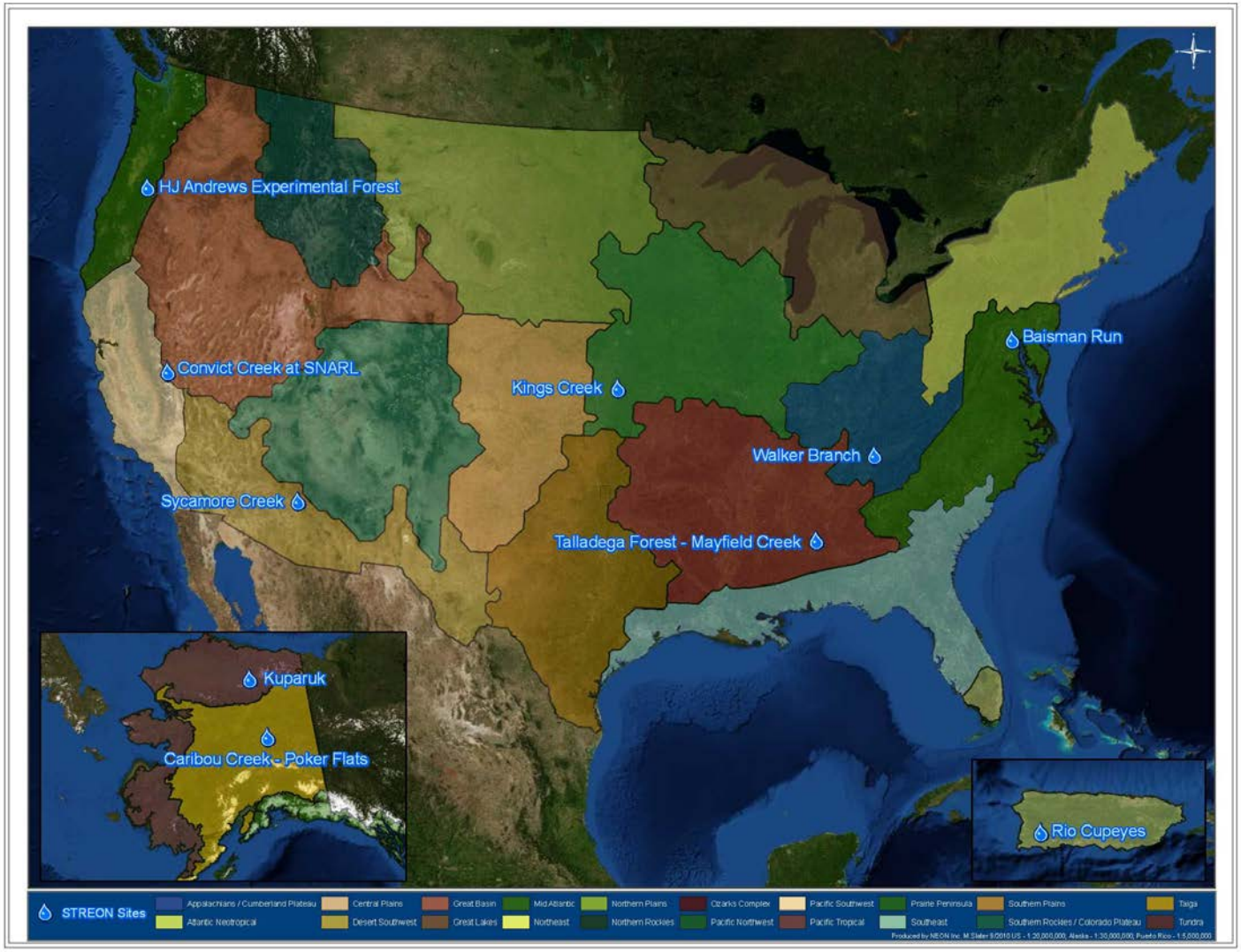

10 STREON Sites

Wadeable streams

10 year experiment

Interactions among key drivers:

- Productivity
- Respiration
- Nutrient cycling and retention

STREON experiment

2 treatments:

Nutrient addition

- Limiting nutrient (N or P)
- Enrich by 5x ambient concentration

Consumer exclusion

- Large-bodied consumers (crayfish, fish)
- Electric exclusion
- Native-sediment filled baskets

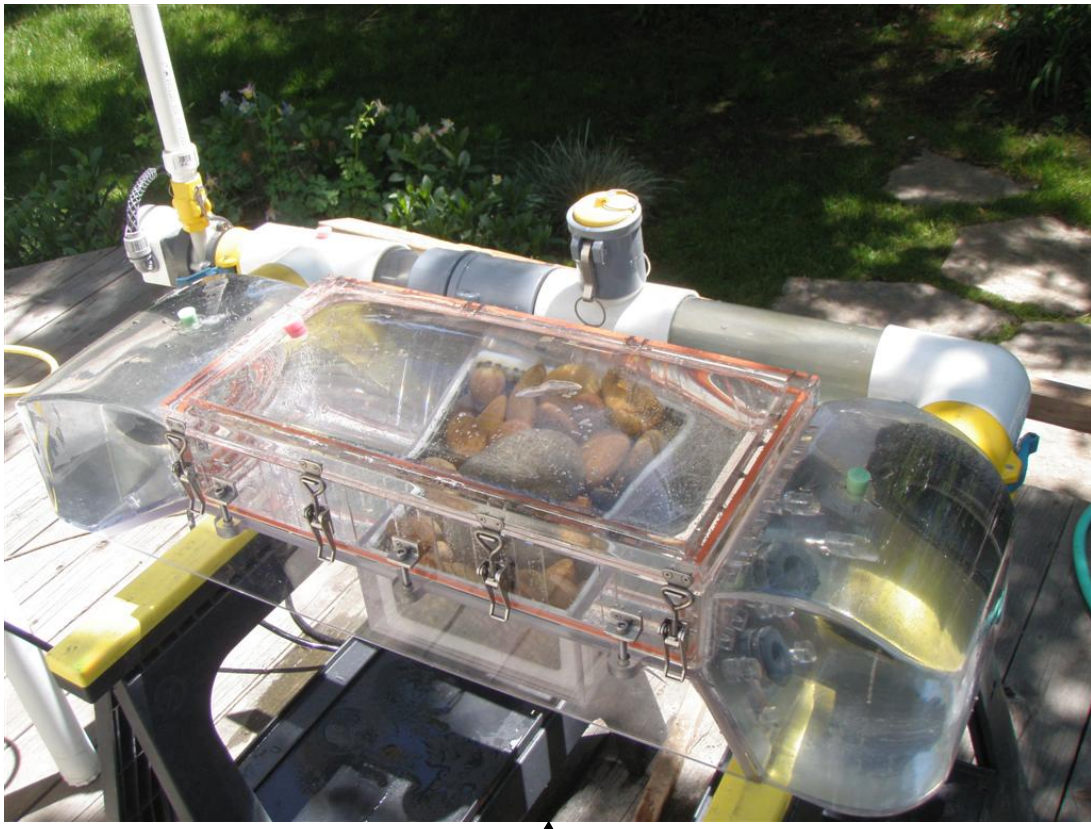

Recirculation chambers (basket incubation)

- Measure change in O_2 and nutrient uptake

Conclusions

Chuck Bohall cbohall@neoninc.org
720-330-1551 www.neoninc.org

NEON Aquatics: Addressing grand challenge questions by sampling aquatic chemistry, morphology, hydrology, biology

Standardized sample design and strategy

STREON experiment to provide information of stream processing and function

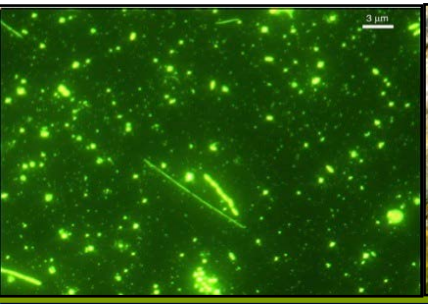

The National Ecological Observatory Network is a project sponsored by the National Science Foundation and managed under cooperative agreement by NEON Inc.