VAN DEEMTER'S STEADY STATE ANALYSIS OF DRAINAGE IN AN INFINITELY DEEP HOMOGENEOUS SOIL PROFILE

M.J.M. Römkens (Ret.), USDA-ARS- Nat'l Sedimentation Lab, Oxford, Mississippi, matt.romkens@ars.usda.gov

INTRODUCTION

The rapid development of sophisticated numerical techniques aided by highly sophisticated digital computer technology has led to the usage of numerical schemes in preference to analytical approaches in seeking solutions to groundwater flow problems. While numerical schemes can address more conveniently saturated as well as unsaturated complex geometric flow regions, analytical approaches may offer more insight in the physics of the problem. This is particular true if one deals with two-dimensional geometrically simple saturated flow regimes. For this class of problems potential theory may offer elegant, but also mathematically difficult to obtain solutions. One of the earliest work of solving two-dimensional groundwater flow problem for steady state flow using potential theory was by Muskat and Wyckoff (1937) who solved problems of horizontal flow into wells or vertical flow under sheet piles in dams. Since that time, the subject matter has been of interest in steady state gravity flow problems involving seepage to groundwater tables or through earthen dams, into ditches, etc.

Interestingly, solution approaches using potential flow theory of the conformal type to solve drainage problems in agricultural land did never find much acceptance among agricultural engineers even though the conditions for which this approach could be used were very amenable to this technique when it concerned low lying bottomland areas in need of drainage. The exception is perhaps the work by van Deemter (1950), a mathematician who under the leadership of S. Hooghoudt addressed the need to account for radial flow resistances in fields with closely spaced drains as opposed to the case with widely spaced drains with a Dupuit-Forcheimer flow regime. His work (van Deemter, 1950) did not receive the attention it should have had. Van Deemter was far ahead in his time, but the mathematical complexity was not conducive for adoption by most practically oriented or applied drainage engineers. In this article, the author discusses in rudimentary manner van Deemter's work by bringing out highlights of his approach and to relate the relevance of this work in the context of erosion problem from upland areas. For details of his work, the author refers the reader to the dissertation itself or to a summary discussion of selected aspects of this work with a relevant derivation for a particular flow regime by Römkens (2013)

PRINCIPLES OF SOLUTION TECHNIQUE

The principle of the conformal solution technique is to describe the flow region in two representations: (1) the complex gravitational geometric field or the z-plane ($z = x + iy$), and (2) the potentials in the z-field or the ω-plane consisting of pressure $\varphi = \varphi(x,y)$ and stream potentials $\psi = \psi(x,y)$ or $\omega(x,y) = \varphi(x,y) + i\,\psi(x,y)$. Each point $z(x, y)$ in the flow field has a unique set of values for the potential function (φ) and the streaming potential (ψ). The objective is to determine the relationship $\omega = f(z)$. The common approach is to transform both the spatial geometric flow region or z-plane and the potential field or ω-plane of this flow region onto a common complex

field, say the t-plane in a 1:1 correspondence. Depending on the complexity of the flow field geometry and the potential field several successive transformation may be involved. The simplest case is for the flow field to have straight vertical or horizontal boundaries. Likewise for the flow potential field to consist of straight pressure and flow potential lines as boundaries of which the intersections are the vertices that are used in the transformations. The boundary conditions of the potential field may be open or closed and irregular posing challenges on finding the appropriate mathematical descriptions for the flow region. In practice, one may have to seek a simplification of the flow field geometry that closely approximates the real situation if this technique is to be successfully used. Also, the flow field may have sinks (drains or ditches) and sources (rainfall, infiltration points). Two special techniques, that often must be employed in the analysis are the Schwarz-Christoffel transformation that allows a polygonal surface to be projected on a half-plane and the Hodograph method which method describes the flow field in terms of a complex velocity field $W = - d\omega(z)/dz = u + iv$ and which is commonly used when dealing with an open nonlinear boundary such as a groundwater table receiving rain. In that case, the boundary is represented by a streamline where water may enter the flow region (rain) and the potential function $\Phi = (y + p/(\rho g)$ with $\varphi = K \cdot \Phi$ where p assumes the value $p = 0$ at the open boundary or air-water interface. It can be shown, using the Cauchy-Riemann equations in this Laplacian flow field that the complex velocity at points on this surface can be described by a circle:

$$W = -\frac{(K+N)}{2} \cdot \sin 2\alpha - i \cdot \frac{(K+N)}{2} \cdot \cos 2\alpha + i \cdot \frac{(K-N)}{2} \tag{1}$$

where u and v are the component flow velocities in the x and y directions, respectively, α is defined by the relationship; $\cot g\alpha = v/\mu$. N is rainfall intensity and K is the soil hydraulic conductivity. More detailed descriptions of the methodology can be obtained from the source (van Deemter, 1950) or from a recent publication about this work by Römkens, (2013).

An example of how the conformal methodology approach was used for a simple case of rainfall on a bottomland incised by a drain or ditch with an impervious layer at a finite depth was given by Römkens (2009). His study concerned a homogeneous isotropic soil profile below the soil surface having a hydraulic conductivity value K and receiving a rainfall intensity N. In that study, seepage losses from a bottomland area with a border-zone of varying width were calculated. Van Deemter (1950) presented a generalized model for 6 combinations of drainage, deep drainage, seepage, evaporation and infiltration. Figure 1 summarizes schematically these combinations. In his analysis, he assumed that the soil profile or aquifer was infinitely deep, and therefore the streamlines were vertical at that depth. This condition appreciably simplified the conformal analysis. The flow adjoining flow regions stood in symmetry to the flow region under consideration and therefore the analysis became mathematically feasible. The flow region surface boundary was open and therefore water fluxes at this boundary consisted of either rainfall or evaporation. The sink/source P in this schematic was represented by a point which in the analysis was either a water supply pipe or a drain of finite size or a ditch. While the geometric region was similar for the different flow regimes, the type solutions obtained were of course flow regime-dependent.

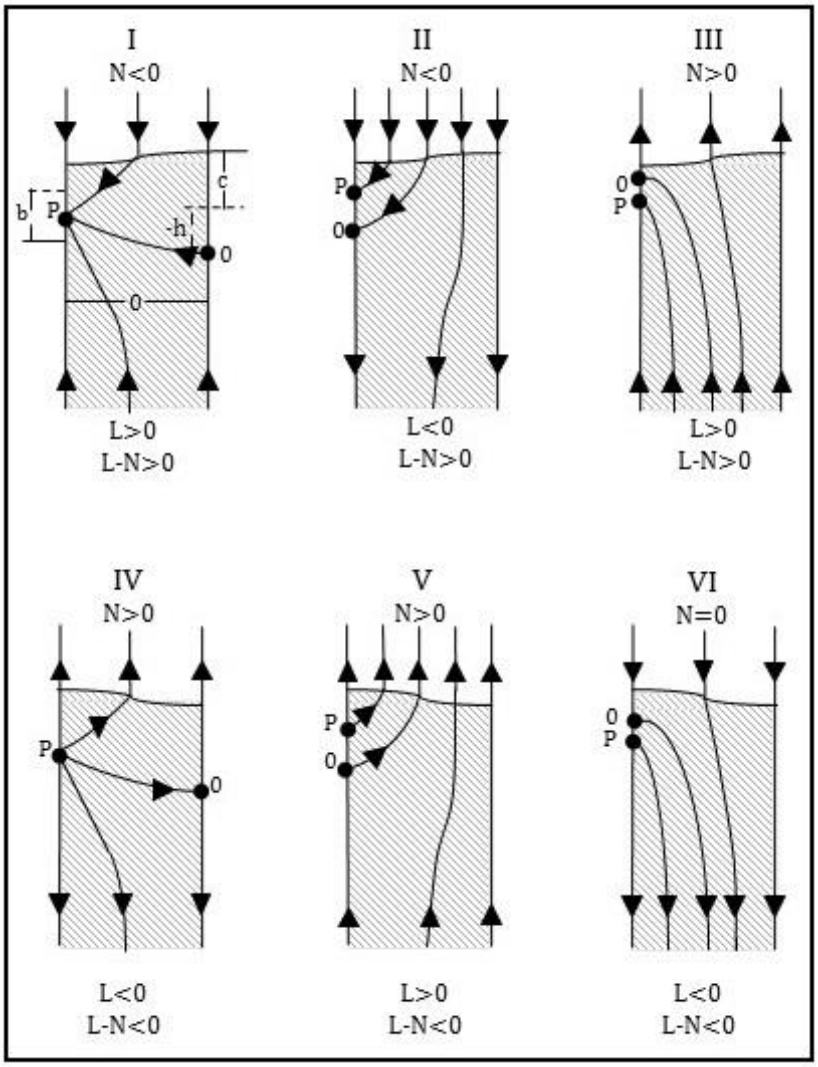

Figure 1 Groundwater flow regimes considered in the analysis by van Deemter: Drainage cases in I, II, III and infiltration cases IV, V, and VI. N = precipitation (rainfall) or evaporation expressed as an intensity and L = the deep drainage or seepage, also expressed as an intensity.

INFILTRATION AND DRAINAGE (CASE II)

The specific case considered in this article (Case II) concerns infiltration (N < 0)) with drainage and deep drainage (L < 0). In case I with seepage, the flow regime differs in that both rainfall and seepage contributes to drainage. The difference between these two flow regimes in otherwise the same geometric area is consequential when this technique is used to assess water quality issues. When different parts of the surface or of groundwater contribute different amounts of pollutant to the drains. A schematic of the flow region is shown in Figure 2.

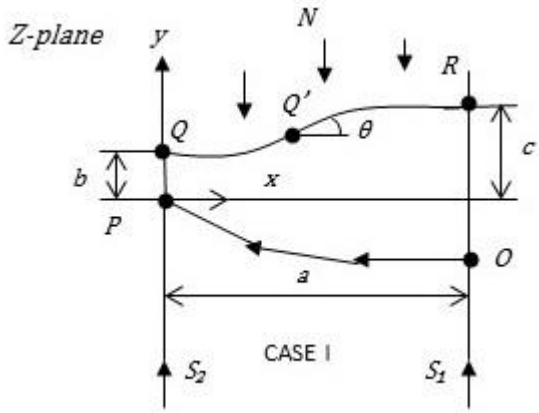

Figure 2 A schematic representation of the flow regime for infiltration, drainage, and deep drainage (Case II).

The boundary conditions for this flow region in terms of φ and ψ with the corresponding values of the vertices P, Q, R, S, in the z-plane are:

$$\begin{aligned}
&\text{PQ (streamline):} && \psi = 0, \text{ with } z(P) = 0 \text{ and } z(Q) = i\cdot b \\
&\text{QR (phreatic surface)} && \varphi = K\cdot y \\
& && \psi = N\cdot x \\
&\text{RS (streamline):} && \psi = N\cdot a \text{ with } z(R) = a + i\cdot c \text{ and } z(S) = a - i\cdot\infty \\
&\text{SP (streamline):} && \psi = (N - L)\cdot a \text{ with } z(S) = -i\cdot\infty \text{ and } z(P) = 0
\end{aligned} \tag{2}$$

From these values, the boundary conditions in the Ω - plane defined by the relationship (3)

$$\Omega = \omega - i\cdot Nz = \varphi + Ny + i\cdot(\psi - N\cdot x) \tag{3}$$

can be determined. The flow region in the Ω-plane turns out to be, fortuitously, an infinitely long strip of finite depth (L-N)·a where the vertices are:

$$\begin{aligned}
&\Omega(P) = -\infty \quad \text{and} \quad -\infty - i\cdot(L-N)\cdot a \\
&\Omega(S) = +\infty \quad \text{and} \quad +\infty - i\cdot(L-N)\cdot a \\
&\Omega(Q) = (K+N)\cdot b \\
&\Omega(R) = (K+N)\cdot c
\end{aligned} \tag{4}$$

The product N·a represents the total amount of rainfall, while (N - L)·a represents the total amount of drainage in which rainfall was adjusted for seepage or deep drainage. For seepage (L > 0). Drainage constitutes the total amount of rainfall plus the amount of seepage, while for the case with deep drainage (L < 0) the amount of drainage equals the total amount of rainfall less the amount of deep drainage.

The spatial location of the open boundary is not defined but must be derived. An important parameter on this boundary is the point of inflection of the water table given by the angle θ. The flow velocity is defined by Eq. (1) and is -i·N at the vertices Q and R, which are the endpoints of the open boundary. At the vertices S the flow velocity is defined as −i·L, which is the seepage or deep drainage rate. From Eq. (1) the location of the center and the radius are determined on the hodograph W (see Fig. 3), which describes in effect the component velocities at all points of the open boundary including that at the inflection point Q'. At Q" the vertical velocity by virtue of Eq. (1) equals i·K.

In seeking the solution ω = f(z) for this flow regimes a common plane is sought onto which the geometric flow region and the potential field within this space are transformed so that a 1: 1 correspondence is obtained. The transformation equations can be obtained by mutual substitution. Figure 3 summarizes a series of conformal transformations of the flow field in the z-plane and ω-plane for Case II of van Deemter. From these transformations a number of parameter were identified to make a 1:1 correspondence possible. Those are:

$$\frac{\lambda^2 - 1}{2\lambda} = tg(\theta)$$

$$\frac{\mu^2 - 1}{2\mu} = (1 + \gamma) \cdot tg(\theta) = \frac{(K + L)}{(L - N)} \cdot tg(\theta) \tag{5}$$

$$\frac{\nu^2 - 1}{2\nu} = -\frac{K}{N} \cdot tg(\theta)$$

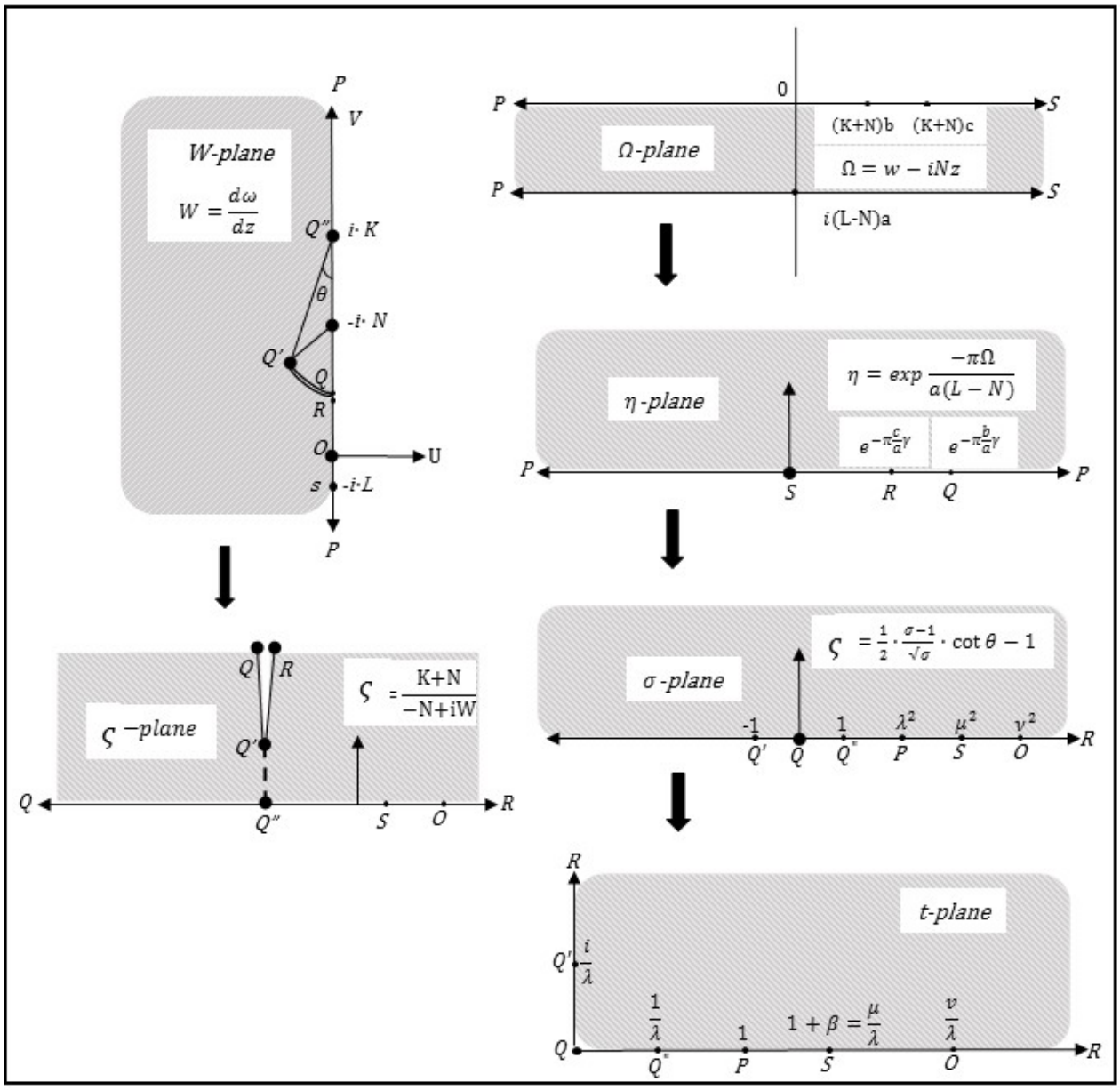

Figure 3 Conformal Transformations of the z-plane and W-plane onto the common plane t.

The fractional linear transformation between points on the upper half planes of η and σ yields the relationship:

$$\eta = \frac{(\sigma - \mu^2)}{(\sigma - \lambda^2)} \cdot \exp\left(-\pi\gamma\frac{c}{a}\right) \tag{6}$$

from which the identity:

$$(1+\beta) = \frac{\mu}{\lambda} = \exp\left(\pi\gamma\frac{c-b}{2a}\right) > 1 \tag{7}$$

can be obtained with γ = (K+N)/(L-N) . Since the hodograph was presented in terms of the differential equation $d\omega/dz$, one must perform an integration to be able to obtain expressions for ω and z in terms of common independent variable. This is done by introducing the variable t so that t = $\frac{1}{\lambda}\sqrt{\sigma}$. The t-plane, shown in Figure 4, has as vertices: t(R) = ∞ and $i\cdot\infty$; t (Q') = i/λ; t (Q) = 0; t(Q''')= $1/\lambda$; t(P) = 1; t(S) = $\mu/\lambda = 1+\beta$; t(O) = ν/λ. It shows how the upper half of the σ-plane is projected on the first quadrant of the t-plane with the vertices located on the positive real and imaginary axes. By substituting in a systematic manner the t variable in a reverse order into the sequence of transformations one can now obtain expressions for z(t) and ω(t). These expressions are:

$$z = a + ic + i\frac{a}{\pi}\cdot\left[ln\frac{t-1-\beta}{t+1+\beta} + \frac{2}{\gamma}\cdot ln\frac{t+1}{t+1+\beta}\right] \tag{8}$$

$$\omega = K\cdot c + i\cdot Na + \frac{a}{\pi}\cdot\left[\begin{array}{c}(L-N)\cdot ln(t-1) - L\cdot ln(t-1-\beta) + N\cdot ln(t+1+\beta) + \\ (L-N)\cdot\frac{(K-N)}{(K+N)}\cdot ln\left(\frac{t+1}{t+1+\beta}\right)\end{array}\right] \tag{9}$$

with γ = (K + N)/((L-N) and $1+\beta = \mu/\lambda$. The veracity of these relationships can be verified upon substitution of selected t-values (for the vertices, see Figure 2). For instance from Eq. (8): t =t(Q) = 0 will yield z = $i\cdot b$; t = t(S) = $1+\beta$ yields z =$-i\cdot\infty$ and z=a $-I\cdot\infty$; and t(R) = ∞ yields z = a + $i\cdot c$. Actually, the latter result was used as input to determine the integration constant. Similarly, from Eq. (9): t = t(P) = 1 one obtains $\varphi = -\infty$ and $\psi = i\cdot(N-L)\cdot a$; for t = t(Q) = 0 one obtains $\varphi = K\cdot b$ and ψ =0; and for t = t(R) = ∞ one obtains $\varphi = K\cdot c$ and $\psi = N\cdot a$.

With the solutions of z and ω in terms of t it should now be possible, barring algebraic complexities, to calculate in principle at any point in the flow region the corresponding values of the potential function φ and stream function ψ. Of particular interest would be the groundwater table above the sink (P) and midway between sinks assuming mirror images of adjacent flow regions. Note that in calculating these values the t-parameter has a real value for points on the QR line segment in the t-plane of Figure 3.

From the spatial relationship, Eq. (7). The groundwater table can be determined by substituting in Eq. (7) t = $i\cdot s$ where s is a real number. Then the groundwater surface, which is the imaginary axis of the t-plane (Figure 3) is given by the relationships:

$$\frac{x}{a} = \frac{2}{\pi}\left[\frac{1+\gamma}{\gamma} \cdot arctg\,\frac{s}{(1+\beta)} - \frac{1}{\gamma} \cdot arctg \cdot s\right] \tag{10}$$

and

$$\frac{y}{a} = \frac{c}{a} + \frac{1}{\pi\gamma} \cdot ln\,\frac{(s^2+1)}{(s^2+(1+\beta)^2)} \tag{11}$$

The distance c midway point between two adjacent symmetrical flow regions and the point b directly above the drain, can be determined and are respectively:

$$\frac{\pi c}{a} = ln\left(1+\frac{2}{\beta}\right) + \frac{2}{\gamma} \cdot ln\left(1+\frac{\beta}{2}\right) \tag{12}$$

and

$$\frac{\pi b}{a} = ln\left(1+\frac{2}{\beta}\right) + \frac{2}{\gamma} \cdot ln\,\frac{\left(1+\frac{\beta}{2}\right)}{(1+\beta)} \tag{13}$$

The total flow rate into or out of the aquifer is determined by; (1) the pressure difference between the groundwater table level and the water level in the in the ditch or open water body to which the flow region is connected, (2) the size of the soil/surface water area through which the flow region drains or supplies water, and (3) the geometric configuration of the flow region. It is to be expected that the location of the groundwater table adjusts dependent on the amount of incoming (rain) or evaporation and to changes in the deep drainage or seepage rates. The effect of these changes are expressed in the parameter γ. In this treatise, the drain or supply line have a spherical perimeter. However, the flow regime in the aquiver is asymmetric and therefore the aquipotential functions away from a circular drain or supply line are not concentric. Adjustments must be made in selecting the locations of the sink or source to ensure a constant value for the aquipotential function around the drain circumference if an accurate value of water fluxes out (drainage) or into (infiltration) is to be obtained. In his work, van Deemter (1950) indicated that for small drains in relation to the flow region the aquipotential coincides with the drain water in the drain lines. On the other hand, Römkens (2009) shifted the location of the sink within the drain in an iterative manner such that the circumference was closely aligned with an aquipotential. At that point, the calculated flow rate and flow gradients at the perimeter are the correct ones. Having accurate values are important from both a hydrological standpoint of knowing how much water is discharged or must be supplied in a watershed, but also from an environmental standpoint of knowing the sources and amounts of pollutants in the flow region. In the van Deemter approach discussed here in which a drain with radius r_o, the aquipotential at the drain circumference is defined as:

$$\varphi_0 = K \cdot \left(\frac{P_0}{\delta g} - \mathrm{r}_0\right) \tag{14}$$

where p_o is the pressure at the drain and h_o is the equivalent water column height. The point on the drain perimeter below the center P is given in his analysis as $z_o = -i \cdot r_o$ in the z-plane and as $t_o = 1 + \delta$ in the t-plane, then δ can be determined using Eq. (8), which yields:

$$\frac{\pi r_0}{a} = ln\frac{\beta}{\beta - \delta} + \frac{(2+\gamma)}{\gamma} \cdot ln\frac{(2+\beta+\delta)}{(2+\beta)} - \frac{2}{\gamma} \cdot \ln\left(1 + \frac{\delta}{a}\right) \tag{15}$$

Also, the aquipotential line at the bottom of the drain perimeter can be obtained from Eq. (7) yielding:

$$\varphi_0 = K \cdot c + \frac{a}{\pi} \cdot \left[(L-N) \cdot ln\,\delta - L \cdot ln(\beta - \delta) + N \cdot ln(2+\beta+\delta) + (L-N) \cdot \frac{(K-N)}{(K+N)} \cdot ln\frac{(2+\delta)}{(2+\beta+\delta)}\right] \tag{16}$$

From the above relationships, β and δ can be determined given known values for K, L, N, ho, and r_o.

Another point of interest is the location of vertice z(O), which is the confluence of the flow originating at the groundwater surface and the flow emanating at great depth of the aquifer. In that case, z(O) becomes t(O) = ν\λ in the t-plane. Then:

$$z(O) = a + i \cdot c + i \cdot \frac{a}{K} \cdot \left[ln\frac{\left(\frac{\nu}{\lambda} - 1 - \beta\right)}{\left(\frac{\nu}{\lambda} + 1 + \beta\right)} + \frac{2}{\gamma} \cdot ln\frac{\left(\frac{\nu}{\lambda} + 1\right)}{\left(\frac{\nu}{\lambda} + 1 + \beta\right)}\right] \tag{17}$$

From Eq. (4) one can determine λ and ν for a known β and the value of h for z(O) = a + i·h.

INFILTRATION

The analyses for cases IV, V, and VI, representing sub-irrigation are very similar to those described for drainage in I, II, and III. In fact, the same formulae apply.

Drainage by incised ditches The analysis of drainage through cylindrical shaped drains was facilitated by the geometric simplicity. On the other hand, drainage of bottomland often takes place through incised ditches. Van Deemter addressed that problem as well and presented an analysis for two ditch geometries; (1) A rectangular incised ditch, kept water free but with a saturated bottom and aside wall that was also partially saturated (Figure 4), and (2) an incised ditch in which the side wall was impervious (Figure 5). In both cases the flow region was infinitely deep.

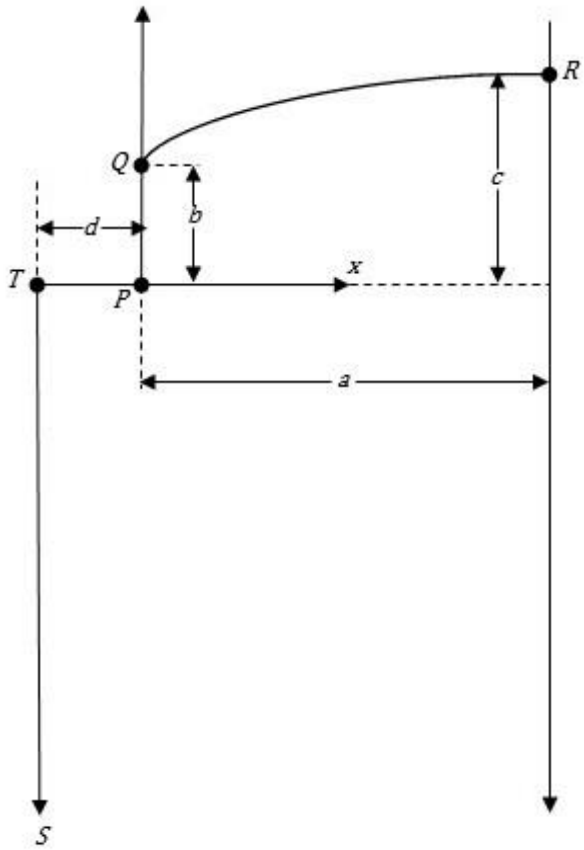

Figure 4

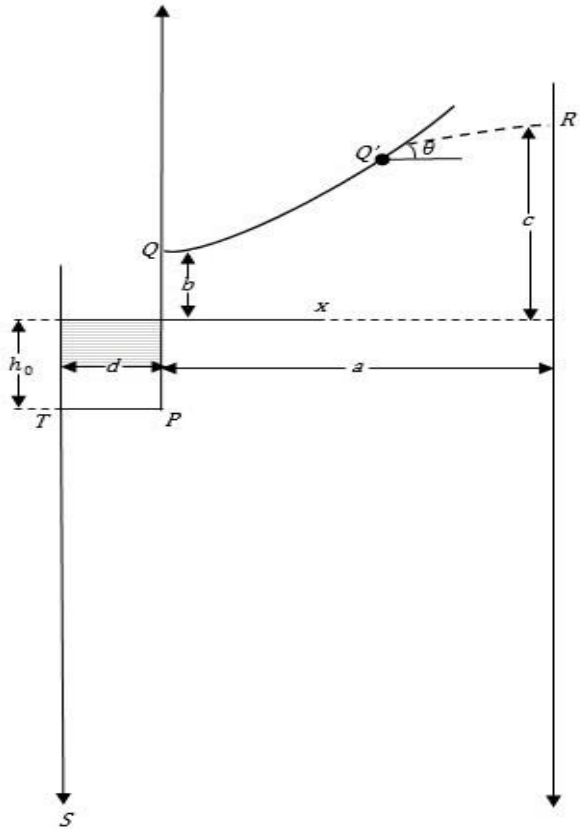

Figure 5

Again the solution approach was by conformal analysis and different mathematical expressions were obtained.

CONCLUDING REMARKS

The advanced analysis by van Deemter, done more than 65 years ago, represented a major breakthrough and achievement at that time. Yet, it never received the recognition it deserved. While the models and analysis described represented idealized situations void of geometric complexities and heterogeneity by layering and/or soil permeability variations., this technology as old as it is may be very useful in water management problems at the field and watershed scale of bottomland areas with drainage and irrigation needs.. From the erosion perspective, the analysis allows the calculation of seepage gradients at the soil profile-surface water interface and the determination of aequipotential surfaces in bank stability problems near ditches and channels. These calculations are the subject of further studies.

LITERATURE CITED

Muskat, M. and R.D. Wickoff. 1937. The flow of homogeneous fluids through porous media. McGraw-Hill Book Company, Inc. 1st. Edition. New York and London.

van Deemter, J.J. 1950.Theoretical and numerical treatment of flow problems connected with drainage and irrigation. Verslagen van Landbouwkundige Onderzoekingen. No 576. Dutch Ministery of Agriculture, Fisheries, and Food supplies... The Hague, Netherlands. (In Dutch).

Römkens, M.J.M. 2013. A theoretical treatise of drainage and seepage in bottomland areas adjacent to incised channels: The J.J. van Deemter analysis. Advances in River Sediment Research-Fukuoka et al. (Eds). Taylor and Francis Group, London, ISBN 978-1-138-00062-9

Römkens, M.J.M. 2009.Estimating seepage and hydraulic potentials near incised ditches in a homogeneous isotropic aquifer. Earth Surface Processes and Landforms. 34: 1903-1914.